THIS COPY IS PROVIDED ON A RESTRICTED BASIS AND IS NOT TO BE USED IN ANY WAY DETRIMENTAL TO THE INTERESTS OF PANDUIT CORP.

PANDUIT PART NO.	PART DESCRIPTION	MATERIAL	"B"	"C"	LABELS/ ROLL
C060X020YJC	WHITE, POLYESTER LABEL	GMY4-W	0.60 [15.24]	0.20 [5.08]	750
C100X025YJC	WHITE, POLYESTER LABEL	GMY4-W	1.00 [25.40]	0.25 [6.35]	500
C100X025YLC	YELLOW, POLYESTER LABEL	GMY4-W	1.00 [25.40]	0.25 [6.35]	500
C100X050CBC	WHITE, VINYL CLOTH LABEL	GMC4	1.00 [25.40]	0.50 [12.70]	175
C100X050YJC	WHITE, POLYESTER LABEL	GMY4-W	1.00 [25.40]	0.50 [12.70]	500
C100X050YMC	SILVER, POLYESTER LABEL	GMY4-S	1.00 [25.40]	0.50 [12.70]	500
C150X075YJC	WHITE, POLYESTER LABEL	GMY4-W	0.75 [19.05]	1.50 [38.10]	250
C200X050CBC	WHITE, POLYESTER LABEL	GMC4	0.50 [12.70]	2.00 [50.80]	50
C200X050YJC	WHITE, POLYESTER LABEL	GMY4-W	0.50 [12.70]	2.00 [50.80]	200
C200X100YJC	WHITE, POLYESTER LABEL	GMY4-W	1.00 [25.40]	2.00 [50.80]	200
C200X100YMC	SILVER, POLYESTER LABEL	GMY4-S	1.00 [25.40]	2.00 [50.80]	150
C100X050YPC	WHITE, POLYESTER LABEL	GMY4-HT	0.50 [12.70]	1.00 [25.4]	250
4 C150X075YPC	WHITE, POLYESTER LABEL	GMY4-HT	0.75 [19.05]	1.50 [38.1]	175
C200X050YPC	WHITE, POLYESTER LABEL	GMY4-HT	0.50 [12.70]	2.00 [50.80]	150
C200X100YPC	WHITE, POLYESTER LABEL	GMY4-HT	1.00 [25.40]	2.00 [50.80]	150

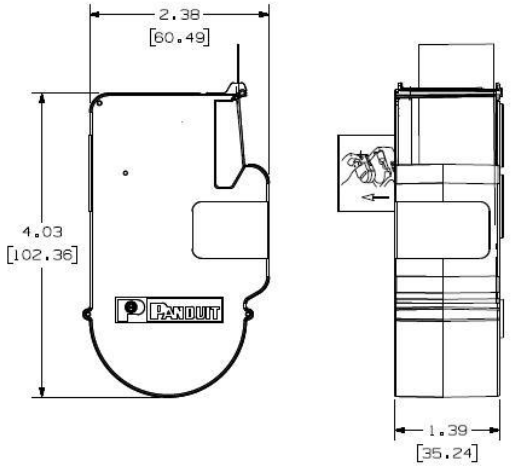

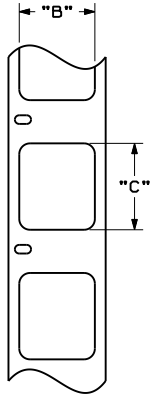

STYLE 1

NOTES:
1. DIMENSIONS IN [ ] ARE IN MILLIMETERS.

REV	DATE	BY	CHK	DESCRIPTION	ECN - R	CUST	SUP
4	5/9/11	RVU		ADD NEW PN: C150X075YPC.	6386 R		
3	9/22/10	RVU		ADDED C100X050YPC, AND C200X050YPC TO CHART.	6152 R		
2	6/17/10	RVU		ADDED C100X025YLC TO CHART.	6065 R		
1	6/29/09	LDG		ADDED C200X100YPC TO CHART	5774 R		
0	4/30/08	RVU		DRAWING RELEASE	5403 R		

CAD FILENAME/LAYERS
100743EY-DC-C10703/06F

PANDUIT CORP. TINLEY PARK, ILLINOIS

CUSTOMER DRAWING
P1 C***X*** CASSETTE
GENERAL COMPONENT LABEL

UNLESS OTHERWISE SPECIFIED, DIMENSIONAL TOLERANCES ARE:
(.X) ± .1 (.XXX) ± .025
(.XX) ± .030 ANGLES ±

UNLESS OTHERWISE SPECIFIED, ALL DIMENSIONS ARE GIVEN IN INCHES, THIRD ANGLE PROJECTION.

DRAWN BY RVU
MAT'L; SEE TABLE
SCALE FULL
DATE 4/30/08
CHK
DRAWING NO. C10703
DWG A SIZE